NO.	PART NUMBER	DESCRIPTION	QTY.
1	0023-0123	Højre sidesten - Panorama/XL/Sl-100/95	1
2	0023-0124	Venstre sidesten - Panorama/XL/sl-100/95	1
3	0023-0127	Røgvendeplade - Panorama XL	1
4	0023-0129	Bagsten - venstre - Panorama XL	1
5	0023-0149	Bagsten - højre -Panorama XL	1
6	0023-0161	Bundsten, Højre, Panorama XL	1
7	0023-0162	Bundsten, Venstre, Panorama XL	1
8	0023-0163	Bundsten, Midt, Panorama XL	3
9	1013-0697	Samlebeslag, rustfri	1

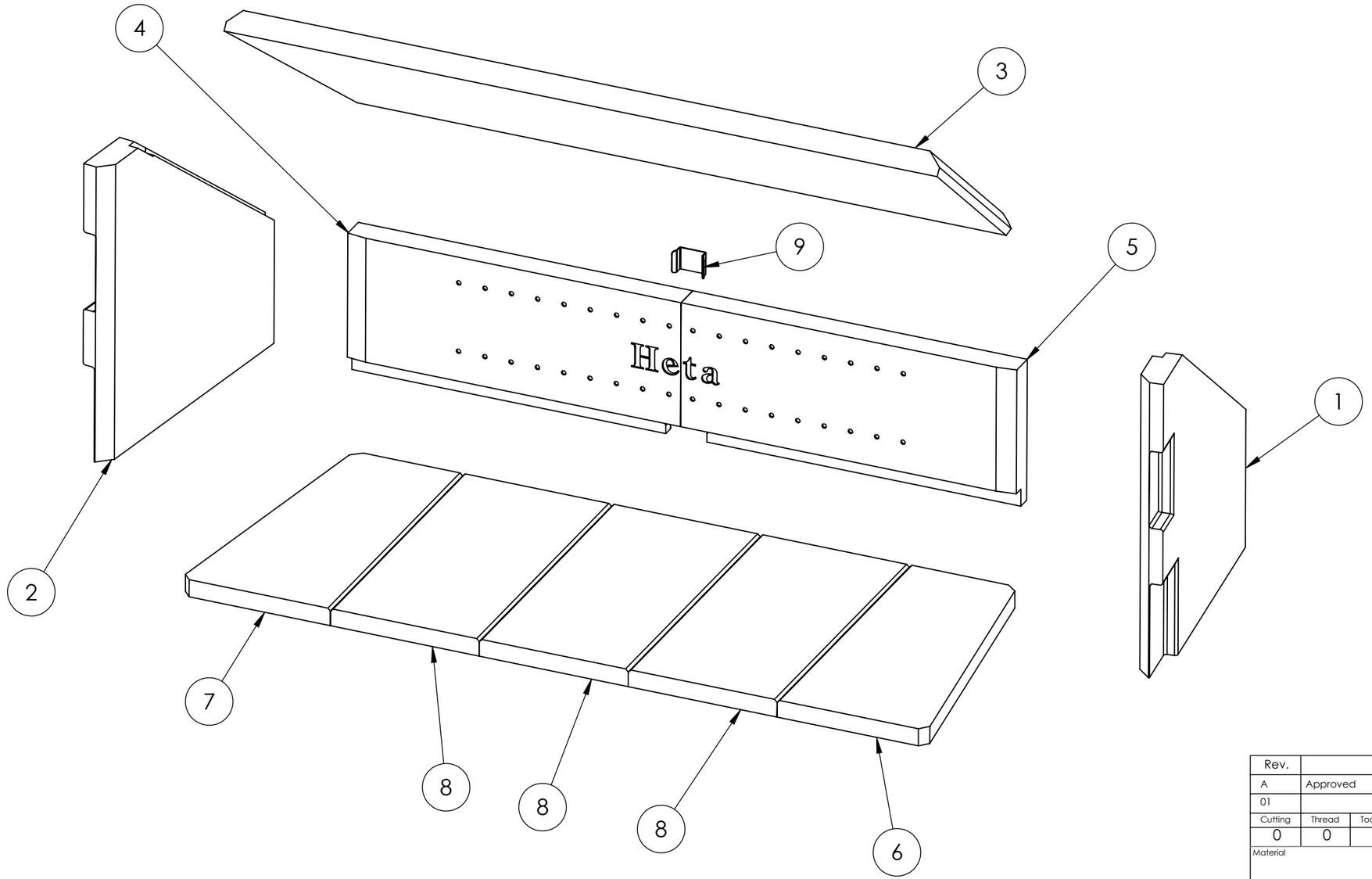

Rev.	Description	Date	Approved
A	Approved	27-05-2020	MLN
01		27-05-2020	MLN

Cutting	Thread	Tooling	Rolling	Bending	Heating	Sandblasting	Welding	Painting	Drawn
0	0	0	0	0	0	0	0	0	MLN

Material	Thickness (mm)	Weight (kg)	Format	Scale	General tol.
		18.320	A3	1:5	Iso 2768-1 m

HETA

Description
Vermiculit komplet - Panorama XL og SL 100

Project
Panorama XL

Variant Default

Part no. 6000-022788

Sheet 1 OF 1

Rev. A

All information contained in this document is properety og HETA. Without written permission, any copying, transmittal to other and any use except that for which it is loaned is prohibited.